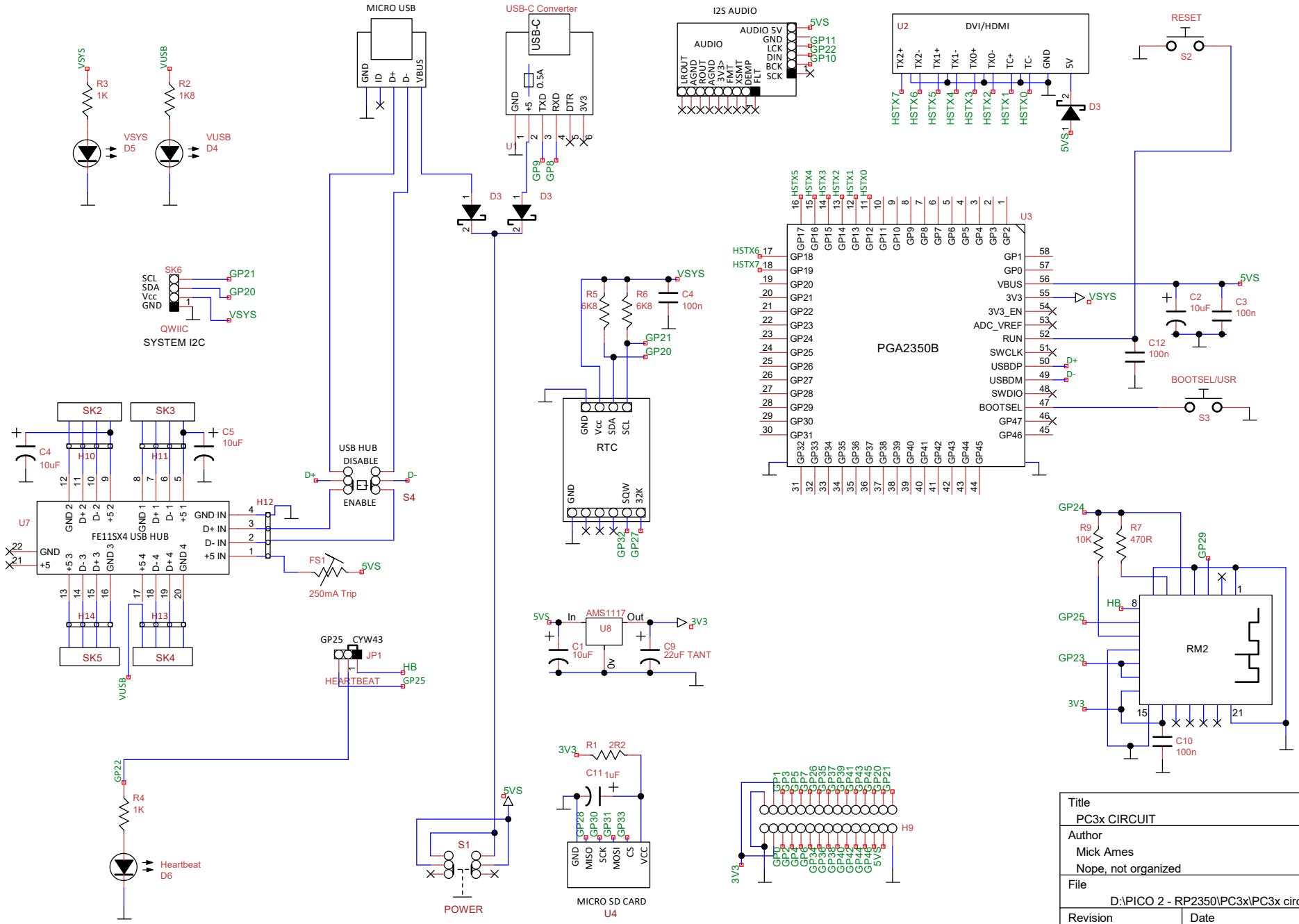

Title PC3x CIRCUIT		
Author Mick Ames Nope, not organized		
File D:\PICO 2 - RP2350\PC3x\PC3x circuit.dsn		Document
Revision 1.0	Date Aug 2026	Sheets 1 of 1